Lab in a Box 09

Energy and Electricity

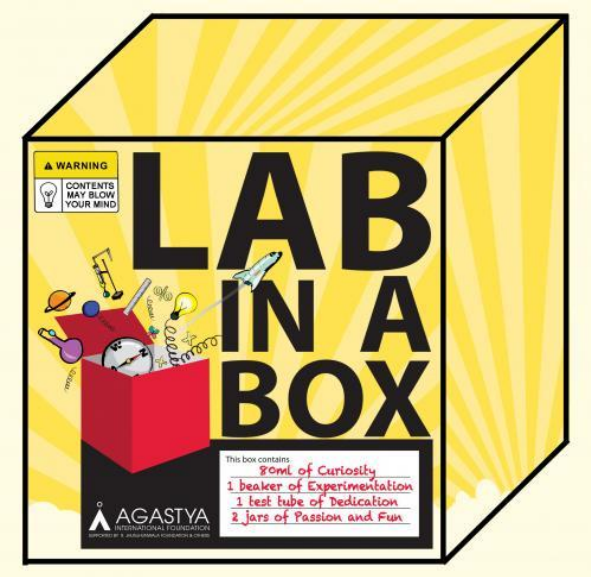

Inventory

Sl. No.	Description	Quantity
	Models	
1	Hydroelectricity model	1
2	Couple pendulum model	1
3	Potential energy to Kinetic energy model	1
4	Solar energy kit	1
5	Wind power model	1
6	Simple electrical circuit - throng model (Conductors and insulators model)	1
	Consumables	
7	1.5 volt battery	5
8	1.5 volt bulb	5
9	Connecting wires	1 bundle
10	Pin packet	1 packet
11	Scissors	5
12	Straw pipe	1 packet
13	Round tin/circular surface bottle.	1
14	3/4 yard of elastic/thread/ Rubber band	
15	a weight/ Iron nut	1
16	A_4 sheets	10 sheets

INDEX

1.Energy

1.1. Introduction

Energy does things for us. It moves cars along the road and boats on the water. It bakes a cake in the oven and keeps ice frozen in the freezer. It plays our favorite songs and lights our homes at night so that we can read good books. Energy helps our bodies grow and our minds to think.

Energy is defined as the ability to do work. Then can you see energy, can you feel energy? No. We can only see it through the various acts it does. It is measured by the amount of work that is being done. Like work, energy is also measured in joule. Electrical energy, wind energy,mechanical energy, sound energy are a few other forms of energy.Potential and kinetic energies are the twoforms of mechanical energy. If energy in one form disappears in a process it necessarily appears in another form. Energy can neither be created nor destroyed. This is the principle of conservation of energy.

1.2 Experiment

Aim
To demonstrate that kinetic and potential energies are interconvertible.

Materials Required
Cotton threads, supporting iron stand and Iron disc with an axle.

Procedure
Step 1: Tie the threads to the axle on either side of the disc at equal distances fromit.
Step 2: Suspend the disc from the stand, so that the lengths of the threads areequal.
Step 3: Wind the threads uniformly and equally on either side of the disc byspinning the axle. Thus, the disc is raised to a certain height.
Step 4: Release thedisc and observe.

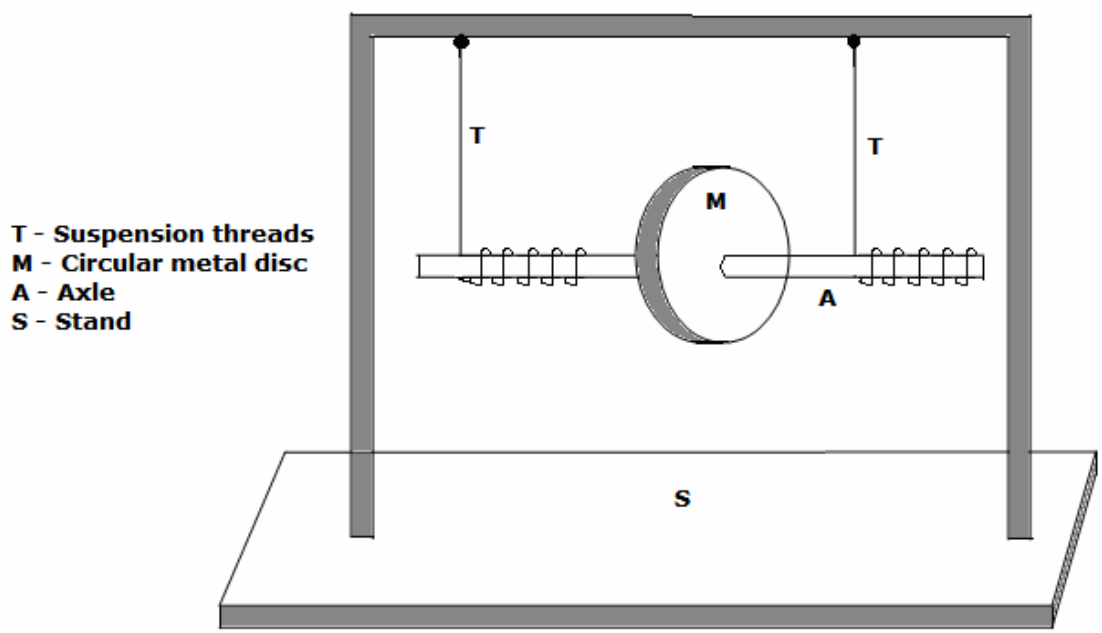

Observation and explanation:

When the disc is released, it moves downwards until the threads completelyunwind. During this time, the disc is spinning about its axis. The disc continues to spin in the same direction even after the threads are unwound completely. Thereafter, the threads start to wind on the axle such that the disc continues to spin due to inertia and is raised up. This process repeats several times.
Initially the disc raised to certain height has only , PE = mgh. Let free, it moves down as well as rotate. It gains translational and rotational kinetic energies at the expense of its potential energy. When at the lowest position, all its PE is converted in to KE of rotation. It continues to rotate due to Inertia and the thread starts winding up on the axel raising the disc. While moving up it transforms all its kinetic energy in to potential energy.It spins down again and the process continues.

Inference
We observe conversion of potential energy into kinetic energy and vice versa.

Daily life example:

- **Dropping a Ball**
  If you hold a ball one meter above the ground then let it go, it will fall towards ground (earth). When the ball is in motion, it has both potential and kinetic energies but when it reaches the ground all the potential energy has been converted into kinetic energy,

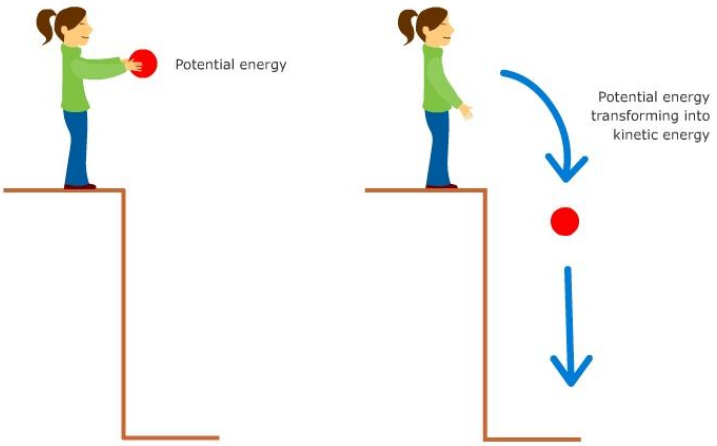

1.3 Conversion of Potential energy in to Electrical energy

Aim
To demonstrate the conversion of potential energy into electrical energy

Materials Required
Hydroelectricity model

Procedure
Step 1: Close the control valve (T). Fill the plastic container with water.
Step 2: Connectthe pipe by a tube to the inlet of water turbine. Connect the water outlet tobucket with a flexible pipe.
Step 3: Connect the ends of the armature coil (splitrings) to a galvanometer.
Step 4: Open the control valve. Water drives the turbinewheel which in turn rotates the armature in a magnetic field. This producesa current as can be seen from the deflection of the needle in thegalvanometer. Increase the height of the plastic container above the turbine. Observe again.

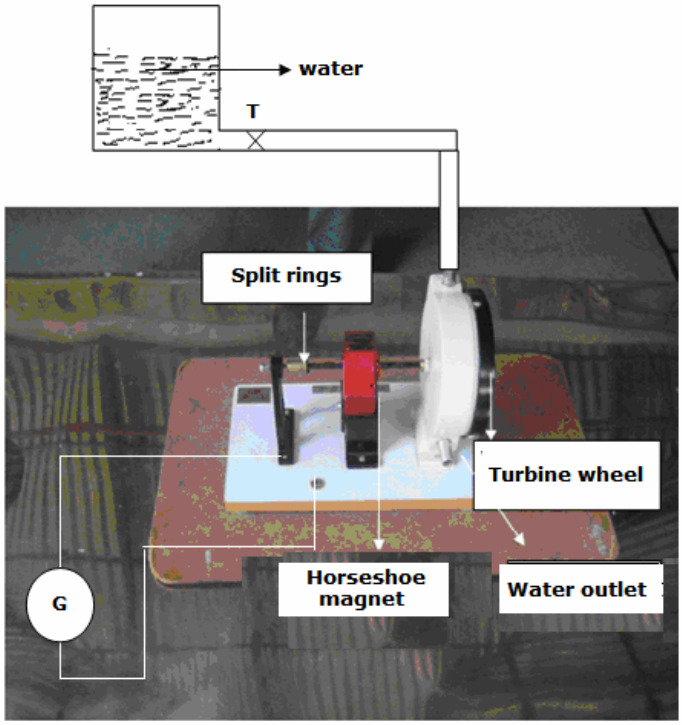

Observation and explanation:
A larger deflection is observed when the height of the water container isincreased. As the level of water in the container falls, the deflection of the needle also decreases gradually.
When the turbine rotates in the magnetic field an emf is generated due to electromagnetic induction. When the water level is high water rushes down with larger kinetic energy and rotates the coil with larger speed causing induction of larger emf.

Inference
According to the law of conservation of energy, potential energy of water isconverted to kinetic energy when it enters the turbine. This in turn drivesthe turbine to produce electricity.

1.4 Conversion of wind energy into electrical energy

Aim

To demonstrate the conversion of wind energy into electrical energy

Materials Required

Demonstration model and Pipe (½ inch diameter)

Procedure

Step 1: Blow air on the fan blades with the pipe. What do you observe in volt meter?

Step 2: Blow air with greater force. Do you observe any change in the volt meter readings?

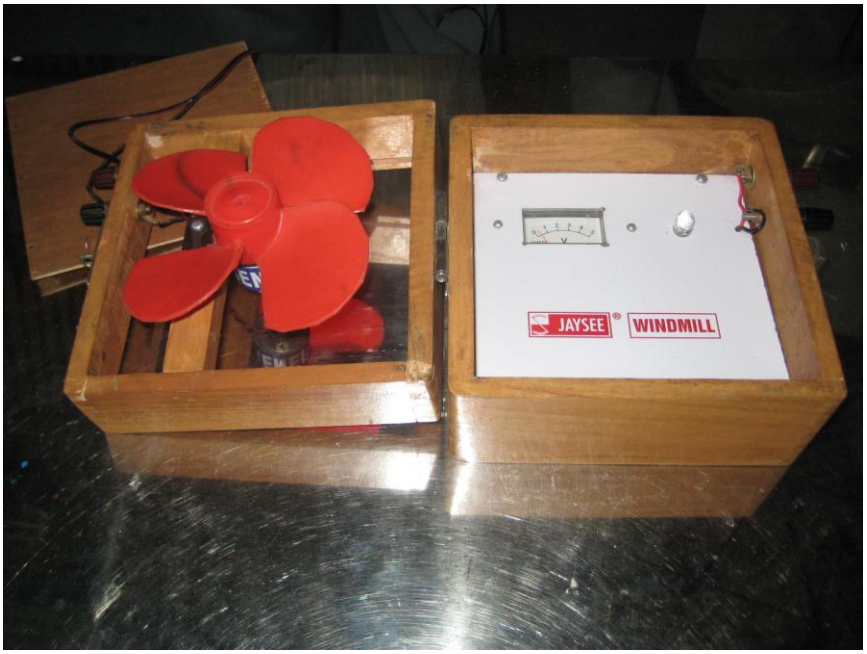

Observation and explanation:

Fan is connected to DC dynamo. When air is blown fan rotates thecoil in the magnetic field and thus causes the generation of emf due to electromagnetic induction, the voltmeter records the induced voltage. Larger the speed of air greater is the speed of rotation and higher is the voltage generated.

Inference
Wind energy in kinetic form is converted to electrical energy, which in turn drives the fan and produces electricity.

Daily life example:

Wind mills are used to generate electricity.

1.5 conversion of solar energy into electrical energy

Aim
To demonstrate the conversion of solar energy into electrical energy

Materials Required
Solar energy kit

Procedure
Step 1: Make connections as shown in figure given below

Step 2: Bring solar kit under the sun light and plug the panel to the different sockets provided at the battery, volt meter, LED, buzzer and fan in succession and observe.

Observation
The battery gets charged, the volt meter shows the voltage developed, the LED glowes, the buzzer sounds and the fan rotates.

Inference
Solar energy is converted to electrical energy, which in turn activates the fan, LED and buzzer.

Daily life example:
Solar lamp.
Solar pump.
solar domestic lighting.

2. Electricity

2.1 Introduction

From lightening in the sky to glowing of lamp, from what holds atoms together as molecules to the nerve impulses that travel along our nervous system, electricity is all around us.

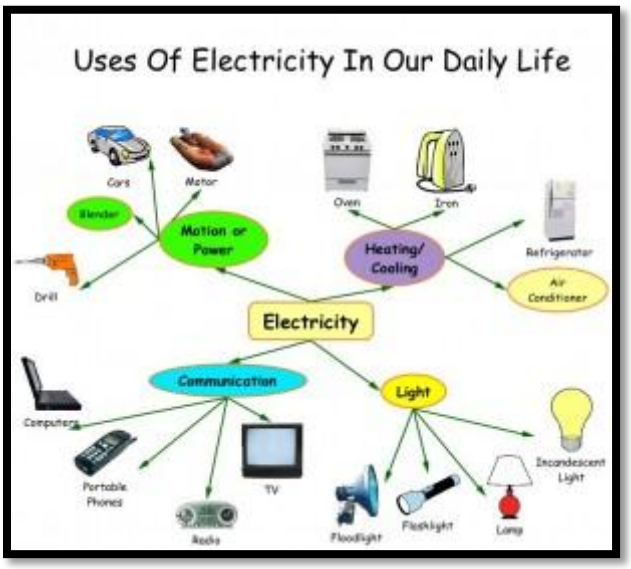

In this technological age, it is important to understand the basics of electricity. How these basic ideas are used to sustain and enhance our current comfort, safety and prosperity.

Electricity is a form of energy. It is the flow of free electrons through a conducting medium. Though all metallic conductors contain free electrons in motion, one does not see current in them. Why? Because these free electrons are in the random motion and do not transfer a net charge in any direction in a given interval of a time. An agent ormechanism that drives the electrons into an ordered flow is therefore necessary.In a simple circuit this agent is either a cell or a battery.

Electrons in flow have been able to demonstrate wonderful physical and chemical effects because of their ability to carry charge. When these charges are accumulated in a region they also build enormous electric field. Let us try to know something about these - current electricity and static electricity.

2.2 static electricity

Aim
To demonstrate that an object gets electrically charged when it is rubbed

Materials required

Pins and drinking straws

Procedure

Step 1: Take a straw, pierce a pin at its center.
Step 2: Rub one side of the straw to your shirt. Place a rubbed straw with its pin inside another straw such that both straws are perpendicular to each other. Now the rubbed straw is free to rotate as shown in the figure given below.

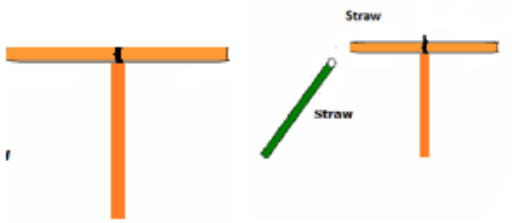

Step 3: Now bring your finger near the rubbed portion. What happens?

Step 4: Take another straw and rub it to your shirt. Bring this rubbed straw near to the rubbed portion of the first straw.
What happens?

Observation and explanation:
In first case your finger attracts the straw. In second case there is repulsion between two straws. The straw acquires electrons from the cloth due to rubbing. It induces positive electric charge on fingers when brought near. It gets attracted towards your finger. When two different objects are rubbed together, electrons are removed from one, while the other mayacquire them. The object that loses electrons becomes positively charged while the object that gains electrons becomes negatively charged. What is observed here is the attraction between like charges and repulsion between unlike charges

Inference:
The strew gets charged when rubbed with cloth.

2.3 Simple electrical circuits

Aim:
To study the working of a Simple electrical circuit

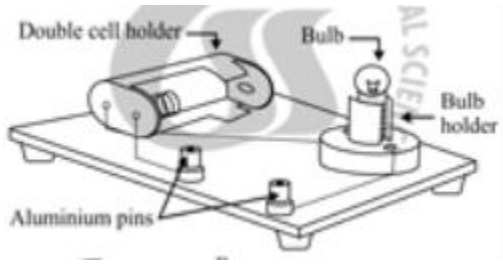

Materials required:
Model,two cells, electric bulb and connecting wires.

Procedure:
Step 1
Take a given model and insert two cells in cell holders
Step2
Place the bulb in the bulb holder
Step3
Connect a wire in the gap between the aluminum pins. What happens?

Observation and explanation:
As soon as wire is connected in the gap the bulb glows. If you disconnect the wire the bulb goes off.
A cell is a source of electricity, a bulb like a fan is a device that draws current. When the gap between aluminum pins is closed by a wire a current flows through the bulb producing light.
When the gap is disconnected the current does not flow through bulb and there is no light because the air gap is poor conductor of electricity

Inference:
A simple electrical circuit consists of a source of current, a device that uses the current and a switch arrangement that permits the flow of current.

2.4 conductors and insulators

Aim

To distinguish between conductors and insulators.

Materials required

Conductors, insulators and model.

Procedure

Step 1: Insert two pencil cells in the cell holder.
Step 2: Insert the copper strip in the gap between two aluminium pins as shown in figure. Observe what happens?
Step 3: Now remove the copper strip and insert brass, plastic and aluminium strips one after another in place of copper strip. Observe what happens?
Step 4: Repeat the experiment by inserting copper wire with insulation first then without insulation in the holes of the aluminium pins. What do you observe in two cases?

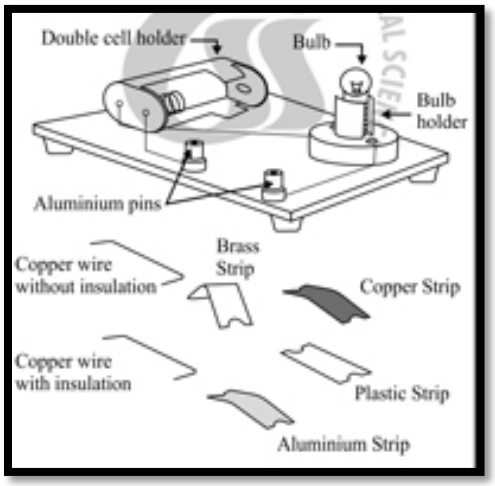

Observation and explanation:

Bulb glows when the copper, aluminium, and brass strips are inserted in aluminium pins. Bulb does not glow when plastic strip is introduced between aluminium pins. The bulb glows when copper wire without insulation is introduced.Copper, aluminium and brass are good conductors of electricity. When you introduce these strips in between aluminium pins, the circuit is closed and they allow electrons to flow from one pin to another and there by conduct current.As a result of this the electrical circuit gets completed and

bulb glows. Whereas plastic is an insulator, it does not allow electrons to flow through it. Therefore when you introduce it in the circuit, the circuit remains open. As a result the bulb does not glow.

Inference:
Among the materials around us some of them are conductors and some other insulters.

3. Do it yourself

3.1Make yourself a mystery box

Materials required

3/4 yard of elastic, a short piece of string, a weight (e.g. a heavy nut), round tin (e.g. syrup tin).

Procedure:

Step 1: In the lid and bottom of tin bore two holes (twoholes in each, of course). Thread a piece of elastic throughthe holes as you see in the drawing. Where the threadscross tie them together with a bit of string and then fastenon the heavy weight or nut.

Step 2: Now put the lid on the tin.

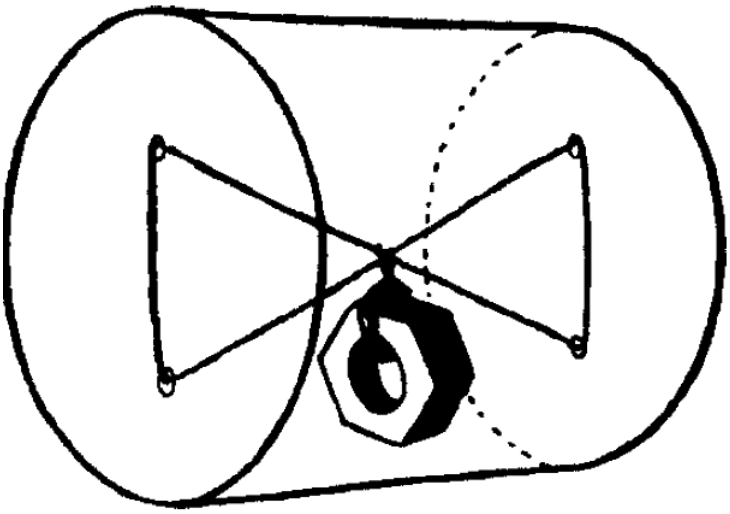

Step 3: Lay the tin on the ground and push it away from you.

Observation and explanation:

The nut stays below the point of suspensionand so the elastic gets wound up and stores potential energy do not roll the tin too far, or the nut will start to turn round aswell. Now let go of the tin, and you should see it roll back on its own, driven along by the energystored up in the twisted elastic. Anyone who does not know what is inside the tin will be quiteamazed.

3.2 The comb and the ping-pong ball

Materials required
Comb, ping pong ball and woolen cloth

Procedure
Step 1: Rub the comb briskly with the woolen cloth. In this way it becomescharged with electricity.
Step 2: Now bring the comb up to a ping-pong balllying on the table. The ball is attracted by the charged comb and itrolls towards the comb. If you move the comb away from the ball, theball rolls after it.

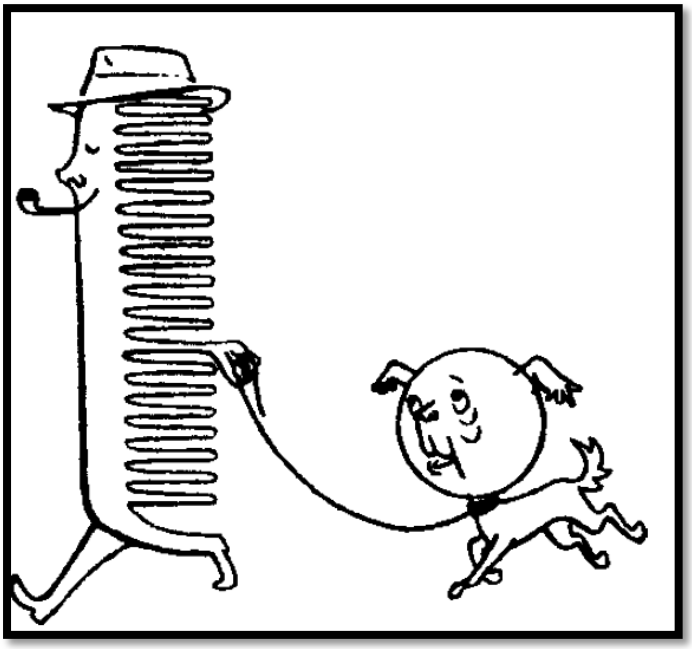

Explanation:
The comb that get charged while rubbing induces opposite charge on ping-pong ball and attracts its.

1. Hopper

Materials required

Materials 8-by-8-inch (20-by-20-cm) sheet of paper (usegreen paper if available), ruler and pencil

Procedure

Step 1: Fold the paper in half from side to side twice.

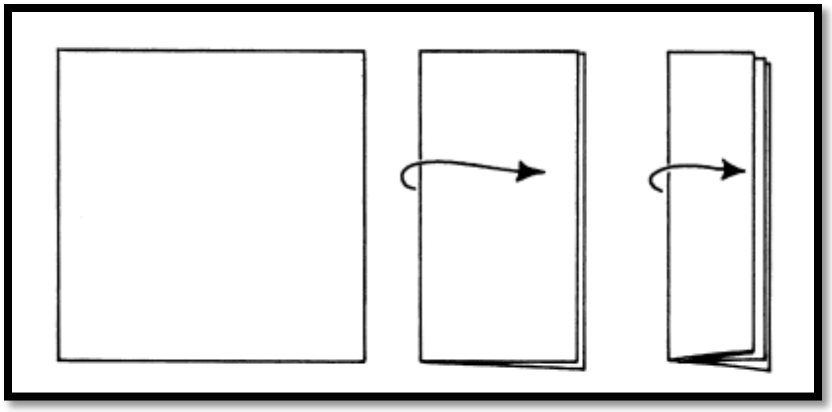

Step 2: Unfold one of the folds. Fold the top corners A and B over as shown in figure.

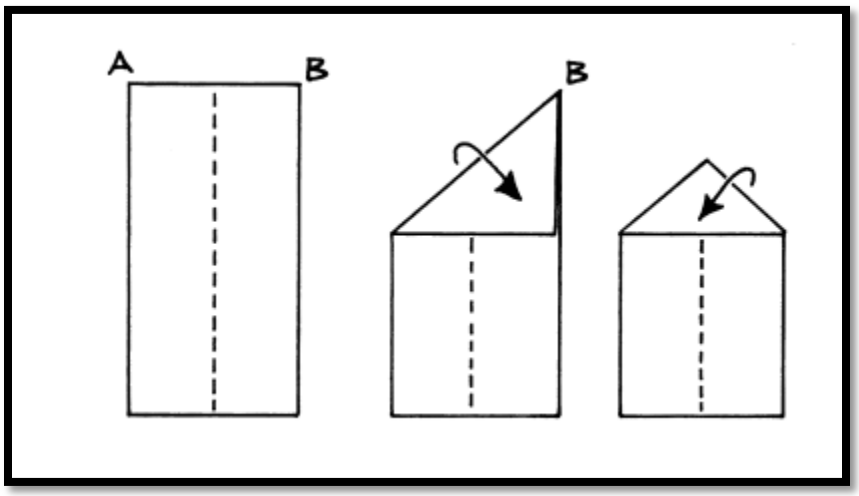

Step 3: Unfold the corners. Use the ruler and pencil to drawlines C and D across the paper.

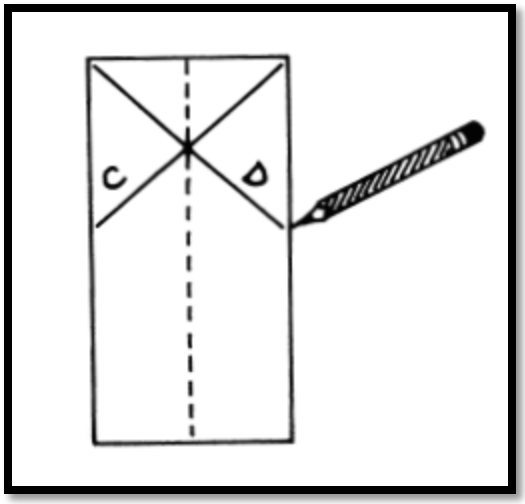

Step 4: Fold the paper along line C. Then unfold the paper.Repeat folding and unfolding along line D.push in the sides of the top of the paper along the foldedlines. Press the top down to form a triangle.

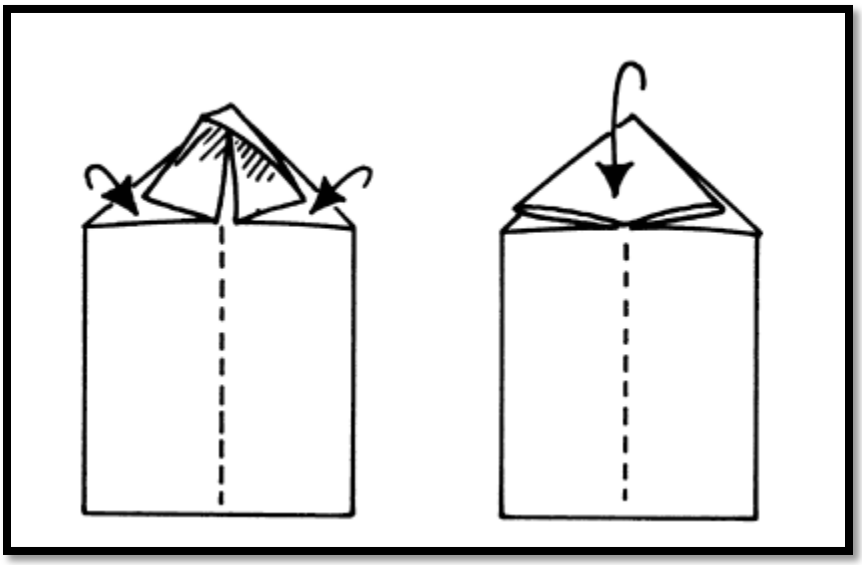

Step 5: Fold the bottom of the paper over to meet the edge ofthe triangle at the top.

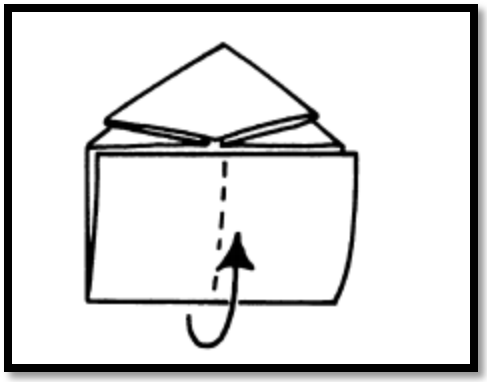

Step 6: Bend one of the triangle points along the fold line. Thenfold the side of the paper over to meet the center foldline.

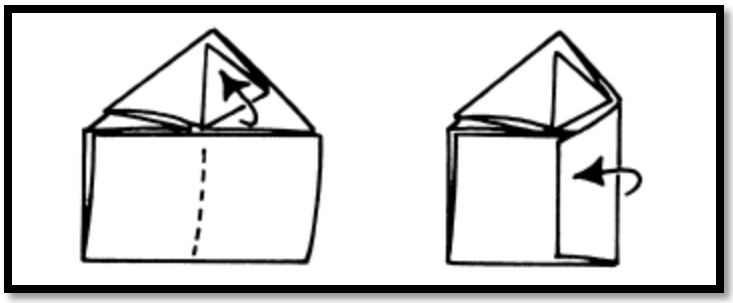

Step 7: Repeat with the other triangle point.Fold the bottom edge over. Then fold part of it down asshown. You have made a leaping frog.

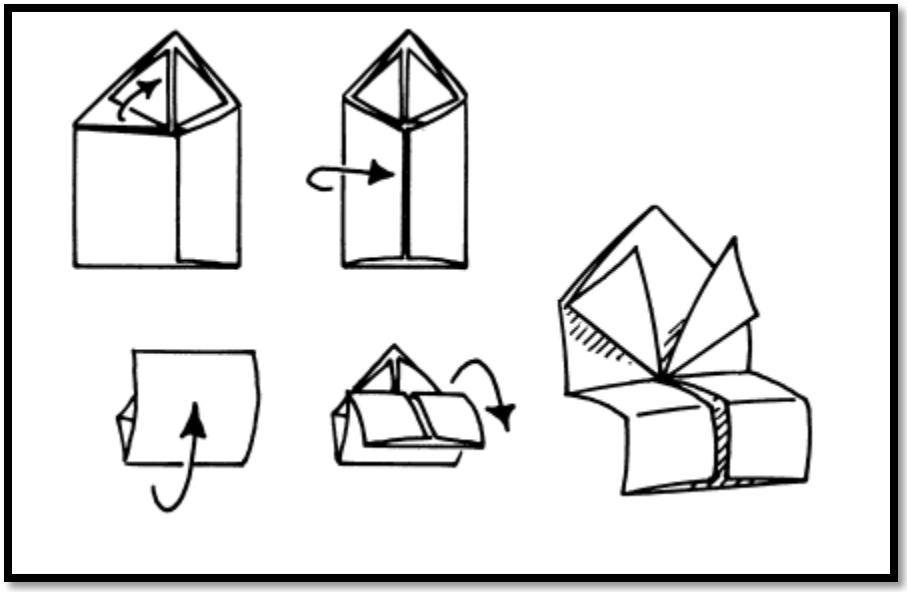

Step 8: Use the pencil to draw eyes on the frog.Stand the frog on a table and push down on its backwith your finger so that the frog's back legs are compressed. Then quickly run your finger down the frog'sback and off the end.

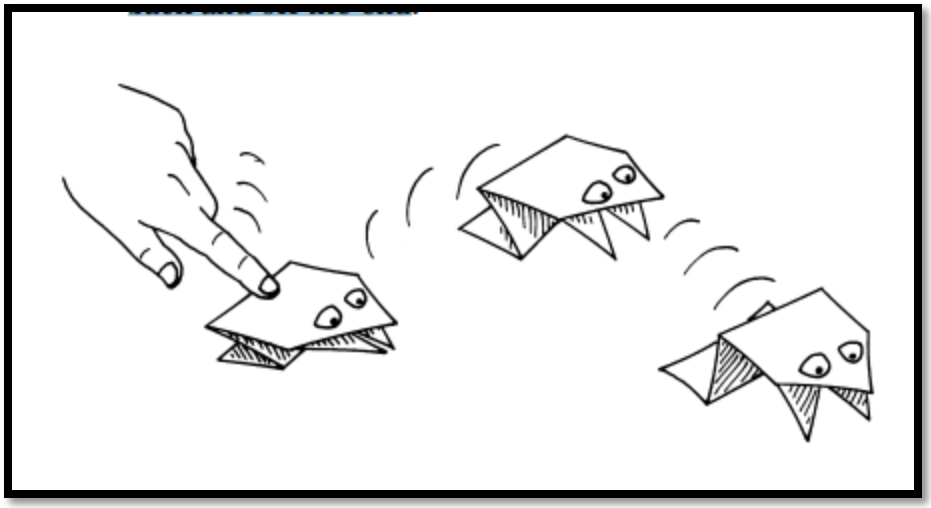

The frog will leap forward and possibly turn a somersault.
Why? When you press down on the frog, you are doingwork on the frog, causing its folded legs to compresstogether much like a spring would be compressed. In thiscondition, the frog has potential energy. When you run yourfinger down the frog's back and off the folded end, this endis more compressed and the frog's head is raised. When yourelease the frog, the potential energy is transferred to kineticenergy as the frog leaps forward.